CORPORATE MEETING PACKAGE

Full Day Meeting Package

- Usage of Conference Hall for 8 hours
- Motorized Projector Screen
- Two (2) Coffee / Tea Break with three (3) varieties of Snacks
- One (1) Buffet Lunch / Set Lunch
- One (1) Whiteboard and one (1) Flipchart with assorted markers
- Rostrum with Microphone
- Writing Pads and Pencils
- Reception Table for Registration
- Bottled Drinking Water & Sweets
- Complimentary Wi-Fi Internet
- Special Flat Rate Parking

Half Day Meeting Package

- Usage of Conference Hall for 4 hours
- Motorized Projector Screen
- One (1) Coffee / Tea Break with three (3) varieties of Snacks
- One (1) Buffet Lunch / Set Lunch
- One (1) Whiteboard and one (1) Flipchart with assorted markers
- Rostrum with Microphone
- Writing Pads and Pencils
- Reception table for Registration
- Bottled Drinking Water & Sweets
- Complimentary Wi-Fi Internet
- Special Flat Rate Parking

All prices are inclusive of 10% service charge and 6% service tax.

GenoHotel EST. 2016

T +60350336666 **FB** @mygenohotel **Insta** @genohotel **Web** www.genohotel.com **E** info@genohotel.com

A Jalan Subang Mas I Taman Subang Mas I 47620 Subang Jaya I Malaysia

All prices are inclusive of 10% service charge and 6% service tax.

GenoHotel EST. 2016

T +60350336666 **FB** @mygenohotel **Insta** @genohotel **Web** www.genohotel.com **E** info@genohotel.com

A Jalan Subang Mas I Taman Subang Mas I 47620 Subang Jaya I Malaysia

LEVEL 1

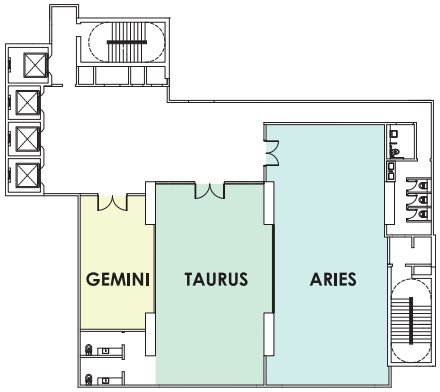

LEVEL 3

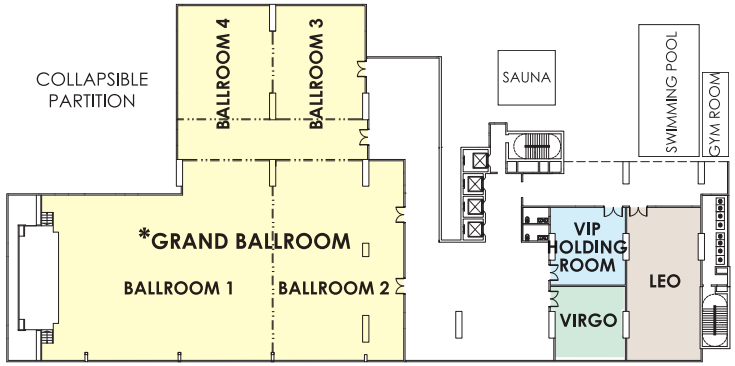

LEVEL 4

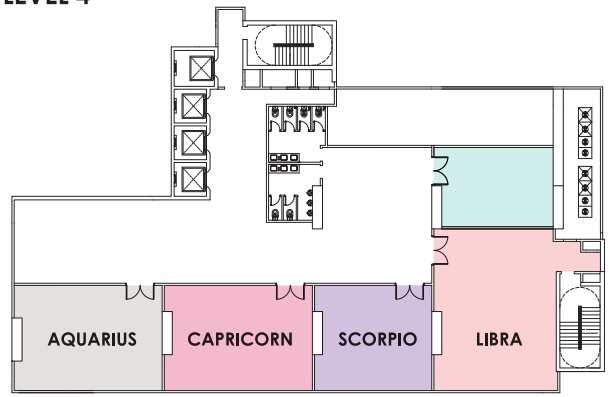

Venue	Area (square meters)	Ceiling Height (approx. meters)	Theatre	Classroom	U Shape	Banquet	Boardroom
GRAND BALLROOM	900	2.5 - 7	1000	450	-	800	-
BALLROOM 1	350	7	600	220	80	200	-
BALLROOM 2	130	2.75 - 3.75	150	100	50	150	40
BALLROOM 3 / 4	130	2.75 - 3.75	50	25	18	60	20
LEO	140	3	120	60	45	80	40
VIRGO	70	3	40	20	15	40	15
VIP HOLDING ROOM							
LIBRA	92	3	80	50	30	60	35
SCORPIO	58	3	30	15	12	20	10
CAPRICORN	74	3	50	20	15	40	15
AQUARIUS	70	3	60	40	20	50	20
ARIES	140	3	120	80	50	70	60
TAURUS	106	3	80	80	30	60	35
GEMINI	46	-	-	-	-	-	15
UNWIND Event Space I Bar	300	3.57 - 4.84					

* The Grand Ballroom can be subdivided into Ballroom 1, Ballroom 2, Ballroom 3 and Ballroom 4, or in any combination based on the floor plan above.

- Floor plans are not to scale and is for illustration purposes only.
- Large door openings for product showcase.